Allied Vision

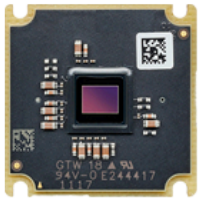

# Alvium 1500 C

## -210

- AR0521 CMOS sensor
- ALVIUM image processing
- MIPI CSI-2 interface
- Various hardware options

## Model without hardware options

## Embedded vision CSI-2 camera with AR0521 sensor

Alvium CSI-2 cameras enable new designs for embedded applications with improved image quality and reduced workload for the host. The innovative ALVIUM System on Chip (SoC) performs image corrections and preprocessing tasks onboard the camera instead of the embedded board. Unlike FPGAs commonly used in machine vision cameras, the ALVIUM SoC is extremely power efficient. With Alvium, integrating hardware and software can be done effortlessly, which ultimately reduces development time. The ON Semi AR0521 CMOS sensor enables imaging at 2.1 megapixel and 119 frames per second. Color models ship with an IR cut filter, monochrome and S-Mount models ship without a filter or protection glass.

### Benefits and features

- Monochrome (1500 C-210m) and color (1500 C-210c) models
- ALVIUM® Technology for on-board image processing
- MIPI CSI-2 interface with up to 4 lanes
- Platform concept that enables the operation of different Alvium camera models with a common software
- Hirose HR FHH55 FPC connector with minimum space requirements for a compact design
- Precise sensor-to-lens mount alignment
- Standard M3 mounting holes for top and bottom mounting, standard M2 mounting holes for front mounting
- Industrial performance for embedded vision applications
- Easy-to-install driver and code examples

## Hardware options

- Housing: Bare board or open housing
- Various lens mounts: C-Mount, CS-Mount, or S-Mount

For more information on hardware options, including product codes and technical data, such as technical drawings and mass, see the Alvium Cameras Hardware Options document.

## Available accessories

- Tripod adapter
- Adapter boards connect to various embedded boards.
- FPC cables in 120 mm, 220 mm, and 420 mm length
- Various lenses and Allied Vision S-Mount lenses with focal lengths 2.97 - 12 mm

# Specifications

| **Alvium 1500 C** | **-210** |
|---|---|
| Interface | MIPI CSI-2, up to 4 lanes |
| Resolution | 1928 (H) × 1088 (V) |
| Spectral range | 300 to 1100 nm |
| Sensor | ON Semi AR0521SR (HD mode) |
| Sensor type | CMOS |
| Shutter mode | Rolling shutter |
| Sensor size | Type 1/3.6 |
| Pixel size | 2.2 µm × 2.2 µm |
| Lens mounts (available) | C-Mount, CS-Mount, S-Mount |
| Max. frame rate at full resolution | 119 fps using 2 to 4 lanes, RAW8 (GREY) |
| ADC | 10 Bit |
| Image buffer (RAM) | 256 KB |
| Non-volatile memory (Flash) | 1024 KB |
| **Imaging performance**<br><br>Imaging performance data is based on the evaluation methods in the EMVA 1288 Release 3.1 standard for characterization of image sensors and cameras. Measurements are typical values for monochrome models measured without optical filter. | |
| Quantum efficiency at 529 nm | 79 % |
| Temporal dark noise | 5.9 $e^-$ |
| Saturation capacity | 9890 $e^-$ |
| Dynamic range | 63 dB |
| Absolute sensitivity threshold | 7.1 $e^-$ |
| **Output** | |

| Alvium 1500 C | -210 |
|---|---|
| Bit depth | Max. 10 Bit |
| YUV color pixel formats | YUV422 8-bit (UYVY) [MIPI CSI-2 (FOURCC)] |
| RGB color pixel formats | RBG888 (RGB3) [MIPI CSI-2 (FOURCC)] |
| Raw pixel formats | RAW8 (GREY), RAW10 (Y10) [MIPI CSI-2 (FOURCC)] |
| **General purpose inputs/outputs (GPIOs)** | |
| TTL I/Os | 2 programmable GPIOs |
| **Operating conditions/dimensions** | |
| Operating temperature | +5 °C to +65 °C housing temperature (with heat sink) |
| Power requirements (DC) | 5 VDC over MIPI CSI-2 |
| Power consumption | Typical: 1.9 W |
| Mass | 10 g (bare board) |
| Body dimensions (L × W × H in mm) | 7 × 26 × 26 (bare board) |
| Regulations | 2011/65/EU, including amendment 2015/863/EU (RoHS) |

# Quantum efficiency

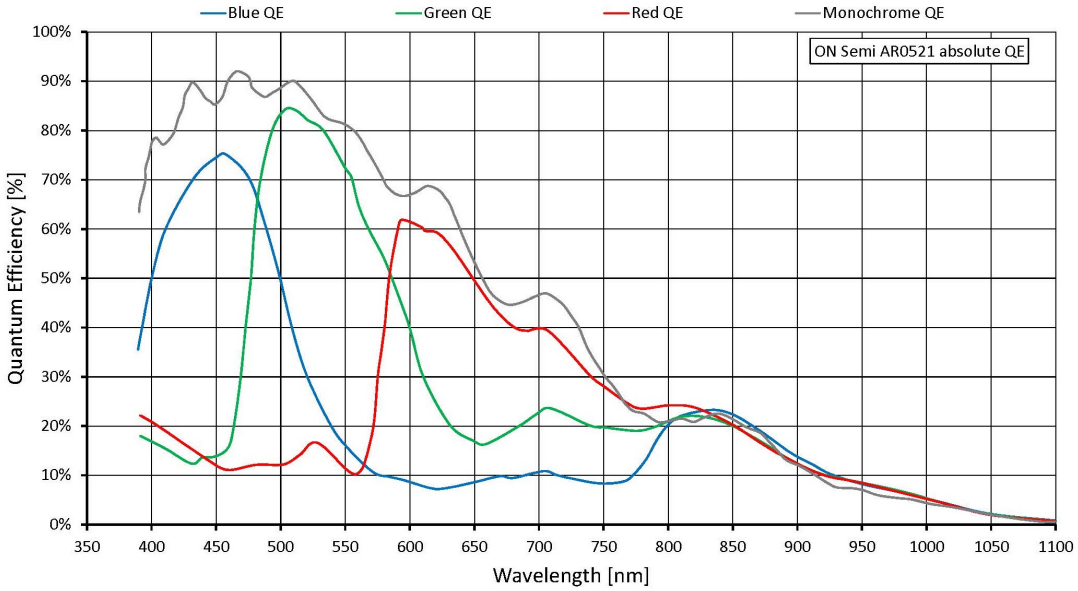

# Features

## Image control

### Auto control

- Auto exposure
- Auto gain
- Auto white balance (color models)

### Other image controls

- Black level
- De-Bayering up to 5×5 (color models)
- DPC (factory calibrated)
- Exposure time
- FPNC (factory calibrated)
- Gain
- Gamma
- Hue (color models)
- Region of interest (ROI)
- Reverse X/Y
- Saturation (color models)

## Camera control

- Acquisition Frame Rate
- Temperature monitoring (sensor board)
- Triggering (Frame Start)

# Technical drawing

**Camera hardware options**
The Alvium Cameras Hardware Options document informs about submodels, such as bare board or open housing cameras with different lens mounts.

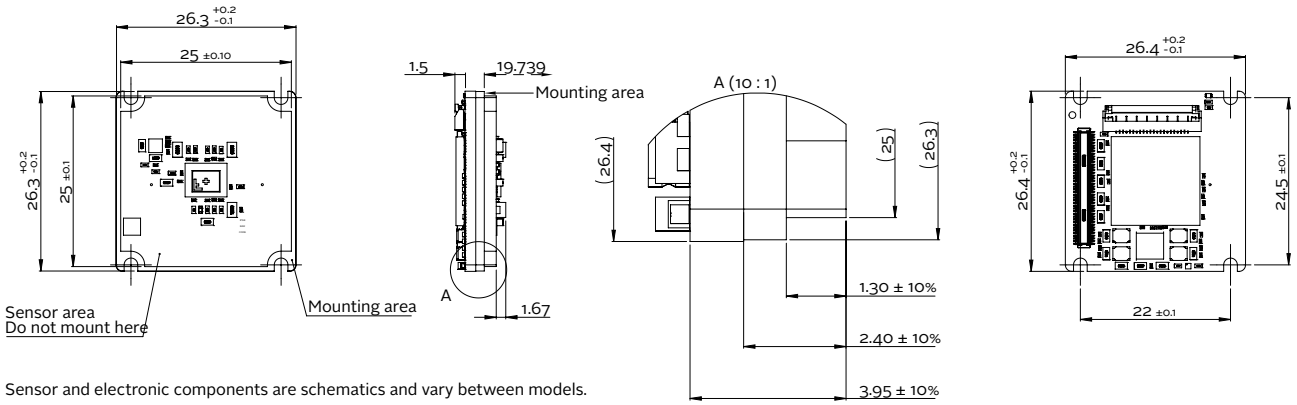


Sensor and electronic components are schematics and vary between models.