Allied Vision

# Prosilica GT

## 2000

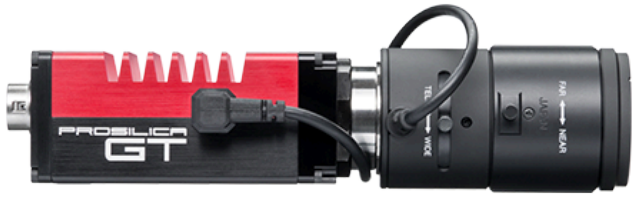


- Versatile temperature range for extreme environments
- IEEE 1588 PTP
- Power over Ethernet
- P-Iris and DC-Iris lens control

## 2.2 megapixel machine vision camera for extreme environments

Prosilica GT2000 is a 2.2 megapixel camera with a GigE Vision compliant Gigabit Ethernet port and Hirose I/O port. Prosilica GT2000 is offered in both monochrome and color models. This camera incorporates the high-quality CMOSIS/ams CMV2000 CMOS sensor. At full resolution, this camera runs 53.7 frames per second. With a smaller region of interest, higher frame rates are possible. It is a rugged camera designed to operate in extreme environments and fluctuating lighting conditions. This camera offers Precise iris lens control allowing users to fix the aperture size to optimize depth of field, exposure, and gain without the need for additional control elements. By default monochrome models ship with no optical filter and color models ship with a Type IRC30 IR cut filter.

### Benefits and features

- Monochrome (GT2000) and color (GT2000C) models
- GigE Vision interface with Power over Ethernet
- Screw mount RJ45 Ethernet connector for secure operation in industrial environments
- Supports cable lengths up to 100 meters (CAT-6 recommended)
- Trigger over Ethernet Action Commands allow for a single cable solution to reduce system costs
- Comprehensive I/O functionality for simplified system integration
- Popular C-Mount lens mount
- Easy camera mounting via standard M3 threads or optional tripod adapter
- Easy software integration with Allied Vision's Vimba Suite and compatibility to the most popular third party image-processing libraries.
- Defect pixel masking feature with the Defect Mask Loader tool that allows you to manage a user defined defective pixel list to match your application and optimize the life cycle of the camera.

Allied Vision

## Hardware options

- Various lens mounts: Select between C-Mount, CS-Mount, F-Mount, or M42-Mount
- Various optical filters: Select between B 270 ASG protection glass and filter types: IRC30 IR cut filter, RG715 IR pass filter, or RG830 IR pass filter.

See the Modular Concept for lens mount and optical filters options. See the Customization and OEM Solutions webpage for additional options.

# Specifications

| **Prosilica GT** | **2000** |
|---|---|
| Interface | IEEE 802.3 1000BASE-T, IEEE 802.3af (PoE) |
| Resolution | 2048 (H) × 1088 (V) |
| Sensor | CMOSIS/ams CMV2000 |
| Sensor type | CMOS |
| Shutter mode | Global shutter |
| Sensor size | Type 2/3 |
| Pixel size | 5.5 µm × 5.5 µm |
| Lens mounts (available) | C-Mount, CS-Mount, F-Mount, M42-Mount |
| Max. frame rate at full resolution | 53.7 fps |
| ADC | 12 Bit |
| Image buffer (RAM) | 128 MByte |
| **Imaging performance**<br><br>Imaging performance data is based on the evaluation methods in the EMVA 1288 Release 3.1 standard for characterization of image sensors and cameras. Measurements are typical values for monochrome models measured at full resolution without optical filter. | |
| Quantum efficiency at 529 nm | 75 % |
| Temporal dark noise | 14.5 $e^-$ |
| Saturation capacity | 9200 $e^-$ |
| Dynamic range | 55.8 dB |
| Absolute sensitivity threshold | 15.1 $e^-$ |
| **Output** | |
| Bit depth | 8/12 Bit |
| Monochrome pixel formats | Mono8, Mono12, Mono12Packed |
| YUV color pixel formats | YUV411Packed, YUV422Packed, YUV444Packed |
| RGB color pixel formats | RGB8Packed, BGR8Packed, RGBA8Packed, BGRA8Packed |
| Raw pixel formats | BayerGB8, BayerGB12, BayerGB12Packed |

| Prosilica GT | 2000 |
|---|---|
| **General purpose inputs/outputs (GPIOs)** | |
| TTL I/Os | 1 input, 2 outputs |
| Opto-isolated I/Os | 1 input, 2 outputs |
| RS232 | 1 |
| **Operating conditions/dimensions** | |
| Operating temperature | -20 °C to +65 °C ambient (without condensation) |
| Power requirements (DC) | 7 to 25 VDC AUX or 802.3at Type 1 PoE |
| Power consumption | 3.4 W at 12 VDC; 4.2 W PoE |
| Mass | 210 g |
| Body dimensions (L × W × H in mm) | 86 × 53.3 × 33 (including connectors) |
| Regulations | CE: 2014/30/EU (EMC), 2011/65/EU, including amendment 2015/863/EU (RoHS); FCC Class A; CAN ICES-003 Issue 4/5 |

# Quantum efficiency

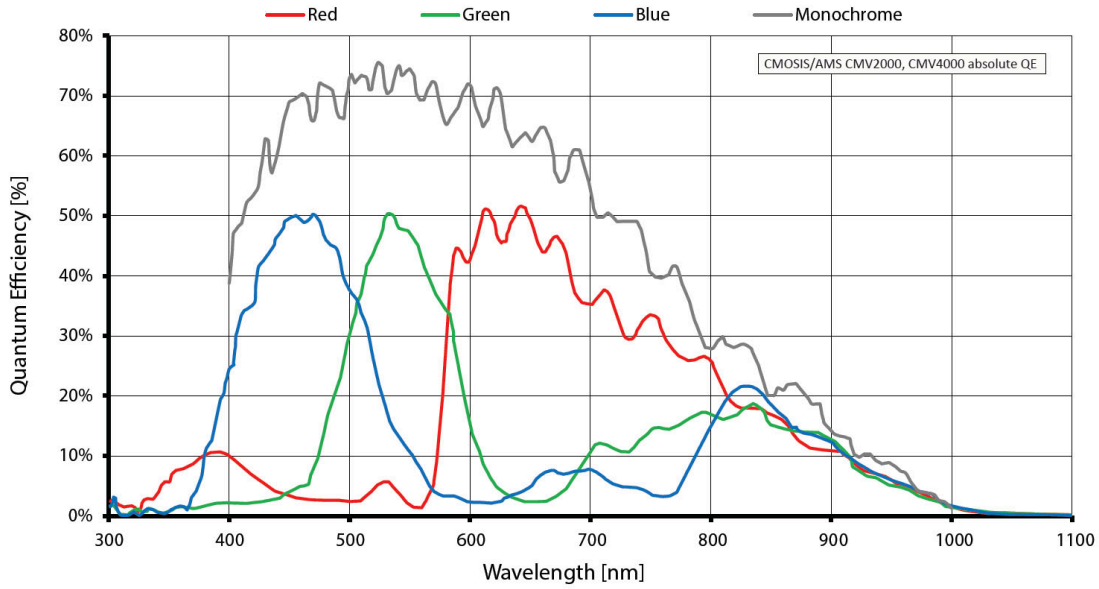


# Features

## Image optimization features:

- Auto gain (manual gain control: 0 to 26 dB)
- Auto exposure (manual exposure control: 25 µs to 122 s)
- Auto white balance (GT2000C only)

- BlackLevel (offset)
- Color correction, hue, saturation (GT2000C only)
- Defect pixel masking (user defined with Defect Mask Loader tool)
- Gamma correction
- Three look-up tables
- Piecewise Linear HDR mode
- Region of interest, separate region for auto features

## Camera control features:

- P-Iris and DC-Iris lens control
- Event channel
- Image chunk data
- IEEE 1588 Precision Time Protocol
- RS232
- Storable user sets
- StreamBytesPerSecond (bandwidth control)
- Stream hold
- Sync out modes: Trigger ready, input, exposing, readout, imaging, strobe, GPO
- Temperature monitoring (main board only)
- Trigger over Ethernet Action Commands

Allied Vision

# Technical drawing

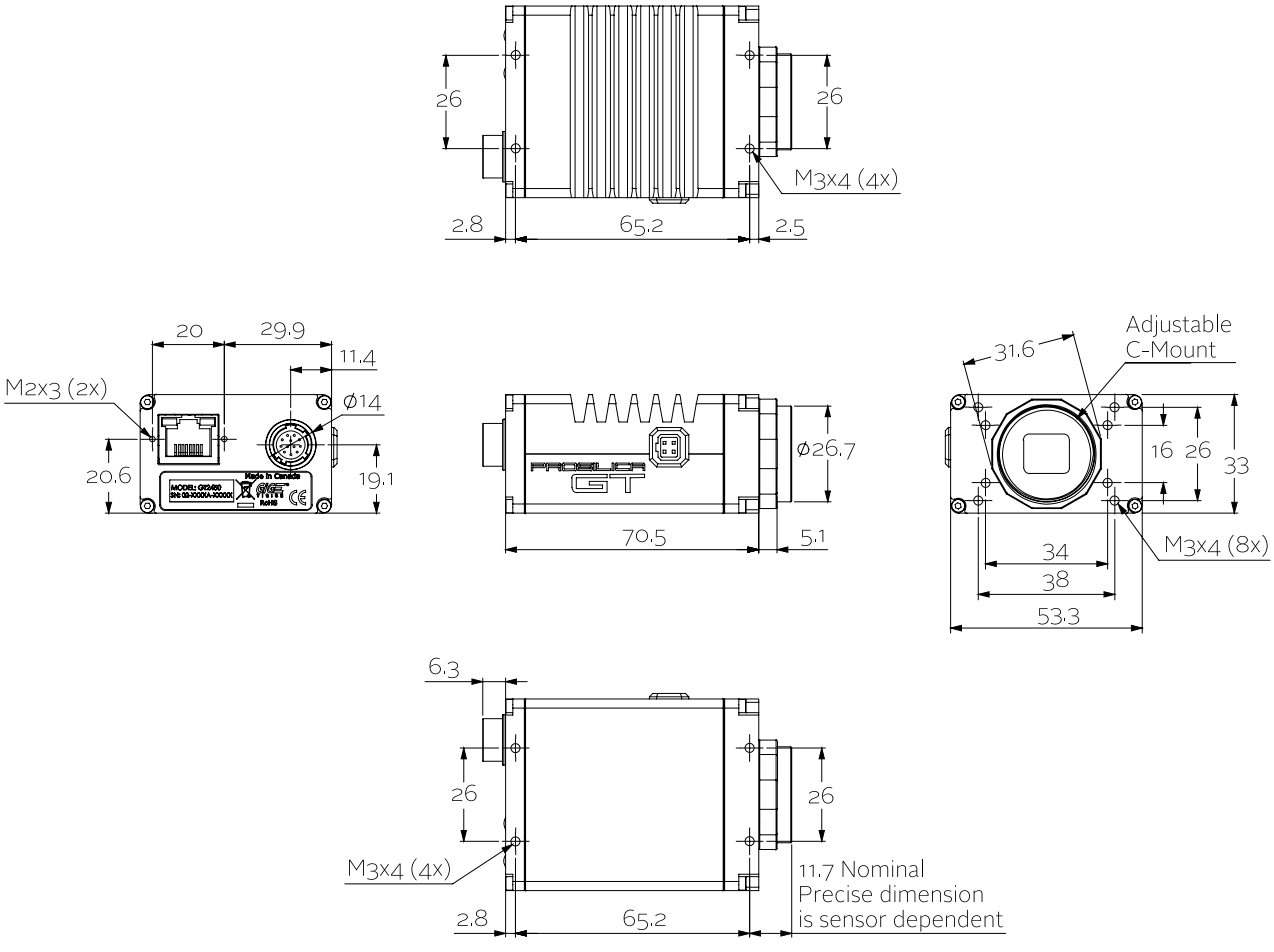

# Applications

Prosilica GT2000 is ideal for a wide range of applications including:

- Outdoor imaging
- Traffic imaging and Intelligent Traffic Systems
- Public security and surveillance
- Industrial inspection
- Machine vision
- Military and space applications