Allied Vision

GigE Vision

Goldeye

G-030 TEC1

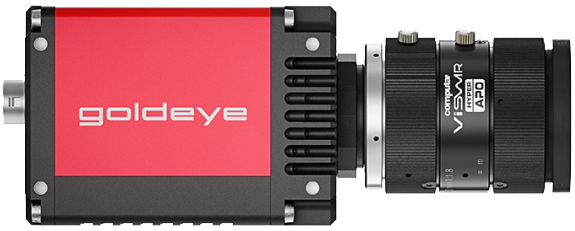

- GigE Vision InGaAs camera
- VGA resolution
- Power over Ethernet
- Compact industrial design
- No fan
- Visible and SWIR sensitivity
- 234 fps

See the invisible

Short-wave infrared (SWIR) cameras with InGaAs sensor technology

Goldeye G-030 TEC1 with Sony IMX991 | InGaAs runs 234.0 frames per second at 0.3 MP resolution.

Goldeye cameras are equipped with InGaAs sensor technology making them sensitive in the short wave infrared spectrum ranging from 900 nm to 1,700 nm. Some models have extended sensitivity in the visible spectrum down to 400 nm or up to 2200 nm. All Goldeye SWIR cameras can be operated at very high frame rates and capture outstanding low-noise images. They are the perfect choice for industrial and scientific applications beyond the visible spectrum. All Goldeye models are available with either a Camera Link or a GigE Vision interface.

Easy software integration with Allied Vision's Vimba Suite and compatibility to the most popular third party image-processing libraries.

AcquireControl adds extensive image analysis functions, such as:

- Pseudo color LUT with several color profiles
- Auto contrast
- Auto brightness
- Analyze multiple regions (rectangular, circle) within the image
- Real-time statistics and histogram display

The Modular Concept offers various options for lens mount, housing variants, optical filters, case design, and more. See the Customization and OEM Solutions webpage for additional options.

Specifications

Interface	IEEE 802.3 1000BASE-T, IEEE 802.3af (PoE)
Resolution	656 (H) × 520 (V)
Spectral range	400 nm to 1700 nm
Sensor	Sony IMX991 | InGaAs
Sensor type	InGaAs
Shutter mode	Global shutter
Sensor size	Type 1/4 VSWIR
Pixel size	5 µm × 5 µm
Lens mount (default)	C-Mount
Max. frame rate at full resolution	234 fps
ADC	12 Bit
Image buffer (RAM)	256 MByte
Cooling temperature	+20 °C (default and calibrated) | +5 °C, +35 °C, +50 °C (uncalibrated) | User configurable
Dark current	4.8 ke^-/s (at +20 °C FPA temperature)
Temporal dark noise	250 e^- (Gain0), 210 e^- (Gain1)
Saturation capacity	165 ke^- (Gain0), 17.2 ke^- (Gain1)
Dynamic range	56.4 dB (Gain0), 38.2 dB (Gain1)

Output	
Bit depth	8 - 12 Bit
Monochrome pixel formats	Mono8, Mono12, Mono12Packed

General purpose inputs/outputs (GPIOs)	
TTL I/Os	1 input, 1 output
Opto-isolated I/Os	1 input, 2 outputs
RS232	115 200 Baud, 8N1 (adjustable)

Operating conditions/dimensions	
Operating temperature	-20 °C to +55 °C (housing)

Power requirements (DC)	10.8 V DC to 30.0 V or via PoE
Power consumption	Maximum: 10.8 W (at 12 VDC), <12.95 W (PoE)
Mass	340 g
Body dimensions (L × W × H in mm)	78 × 55 × 55

Quantum efficiency

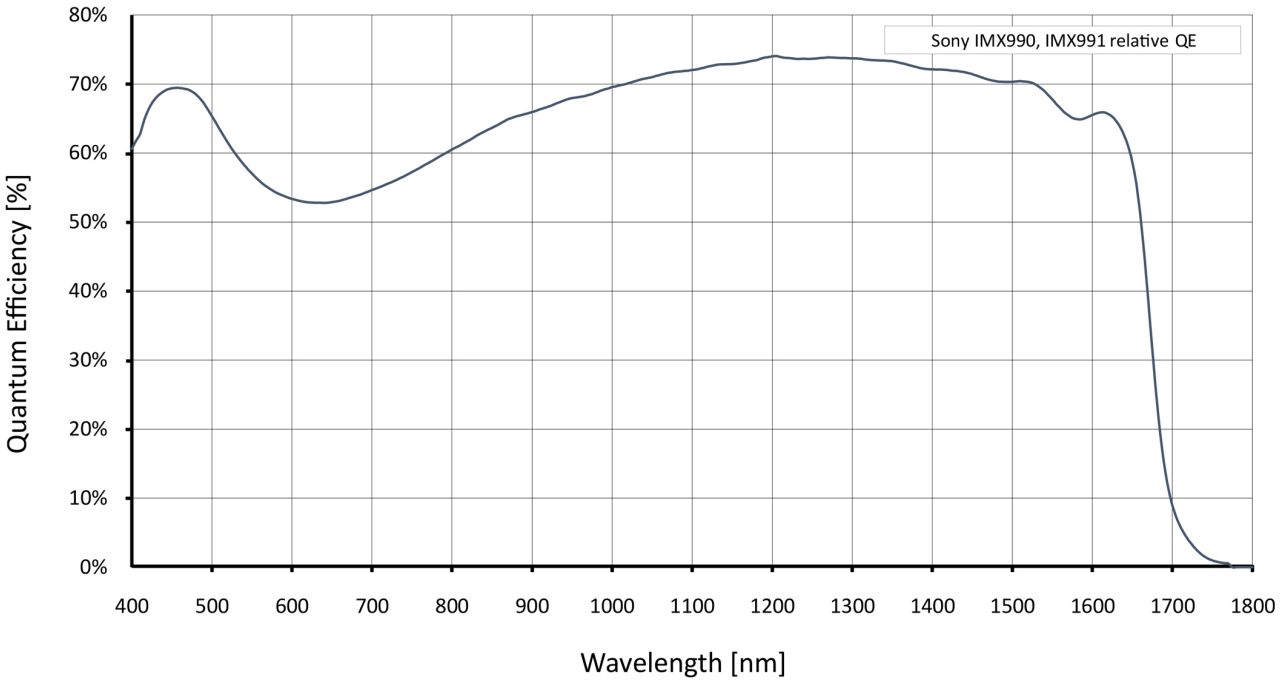

Features

Image control: Auto

- Auto contrast
- Auto exposure

Image control: Other

- Background correction
- Binning
- Black level
- Decimation
- DPC (defect pixel correction)
- LUT (look up table)
- Multiple ROIs (regions of interest)
- NUC (non-uniformity correction)
- Ultra short exposure mode

Camera control

- Acquisition frame rate
- Bandwidth control
- Event channel
- Firmware update in the field
- I/O and trigger control
- Image chunk data
- Stream hold
- User sets

Sensor temperature control

- Temperature management by TEC
- Temperature status indicator

Technical drawing

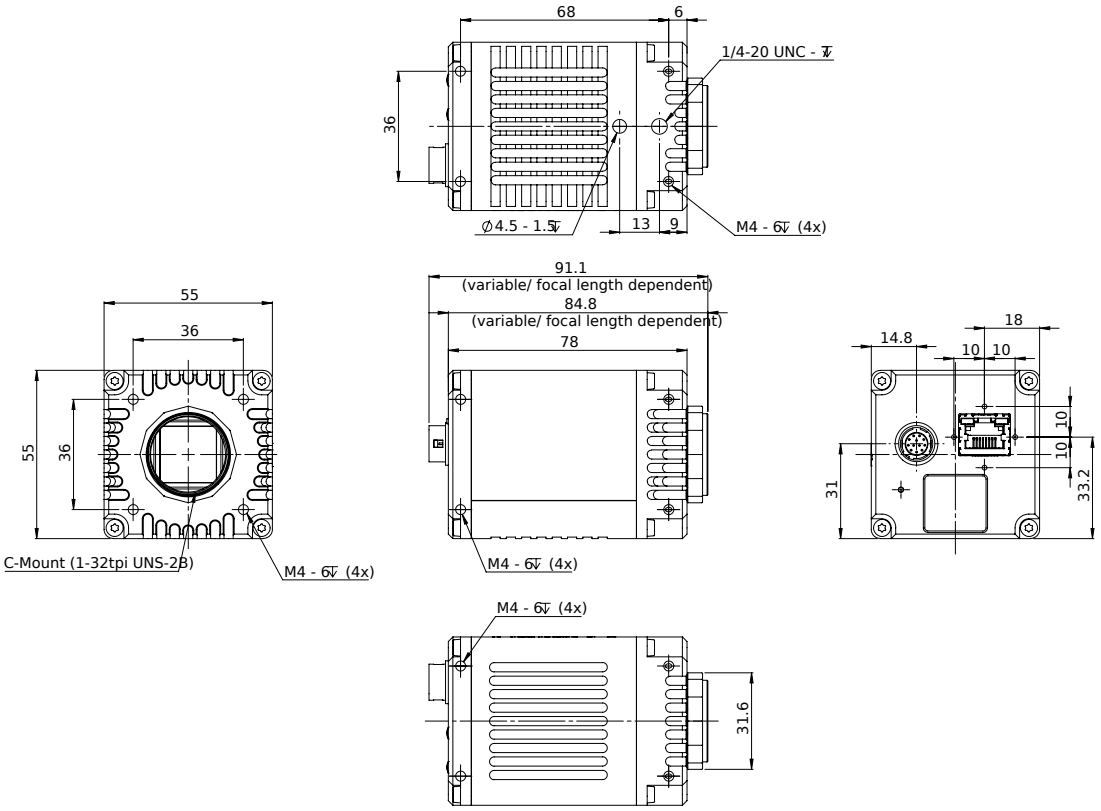

Applications

Goldeye cameras are very sensitive in the SWIR spectrum. They can be used in an extended operating temperature range. Thanks to temperature stabilization and integrated image correction, Goldeye cameras achieve an outstanding image quality with little noise and a high dynamic range. They are well-suited for many typical SWIR applications in various industry branches:

- Semiconductor industry: Solar cell and chip inspection
- Recycling industry: Plastics sorting
- Medical imaging, sciences: Hyper- and multi-spectral imaging, microscopy, optical coherence tomography (OCT)
- Metal and glass industry: Thermal imaging of hot objects (250 °C to 800 °C)
- Agriculture industry: Airborne remote sensing
- Printing industry: Banknote inspection
- Electronics industry: Laser beam profiling
- Surveillance and security: Vision enhancement (for example, seeing through fog)

White Paper To learn more about typical application fields for SWIR cameras, download our White

Paper: Seeing beyond the visible – short-wave infrared (SWIR) cameras offer new application fields in machine vision